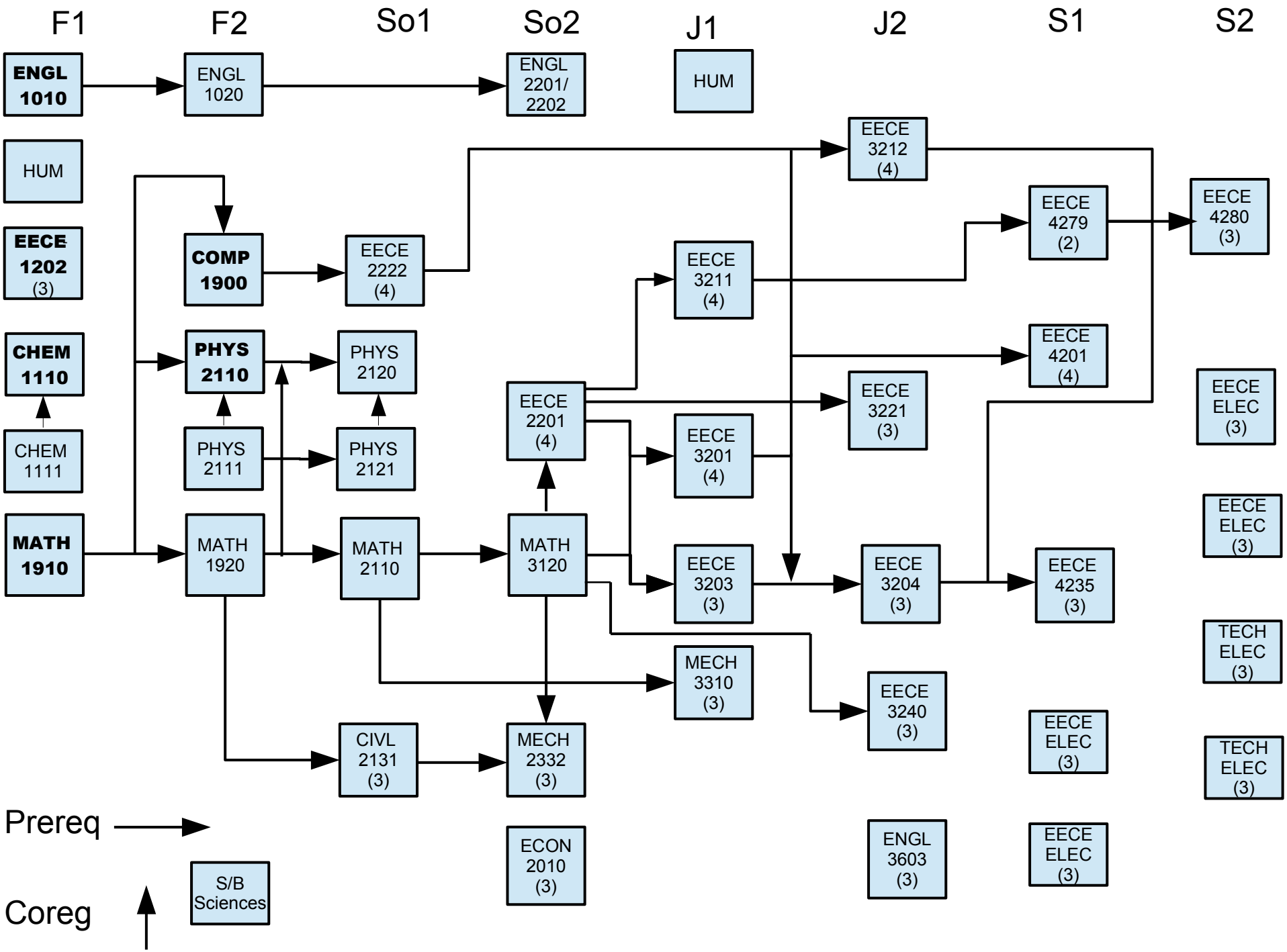B S in Electrical Engineering